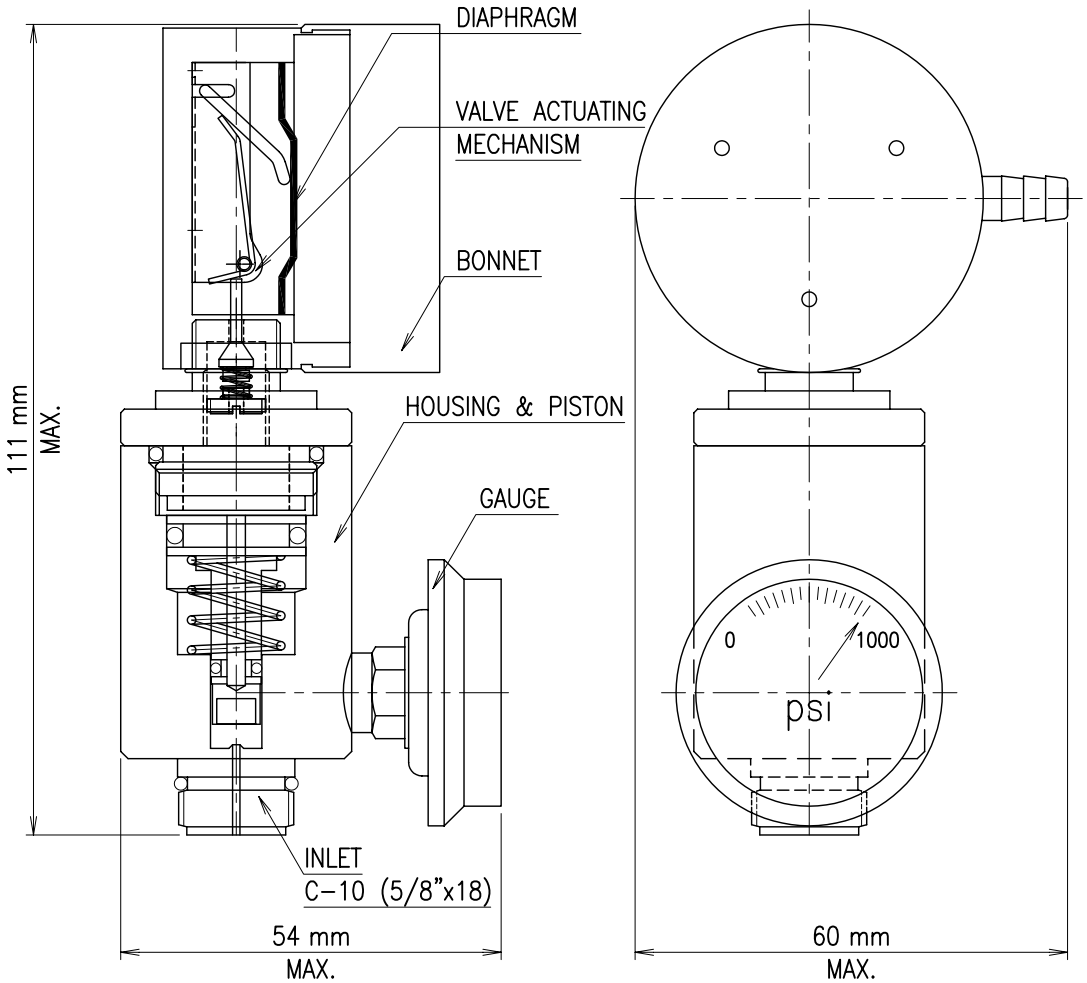

MATERIALS OF CONSTRUCTION

BODY	FORGED BRASS NICKEL PLATED / SS
GAUGE	0–1000 PSI MAX
DIAPHRAGM	NITRILE
PISTON	FORGED BRASS / SS
SEATS	TEFLON / PCTFE
SEALS	VITON
BONNET	ALUMINUM ANODIZED
INLET	C10--ADAPTABLE TO STANDARD CGA CONNECTION
NO OF STAGES	TWO
OUTLET FLOW	0 TO 3 LIT/MIN
OUTLET CONNECTION	3/16" BARB
OPERATIVE VACUUM	UP TO 3 INWC

SGI 21, MEHTA INDUSTRIAL ESTATE, LIBERTY GARDEN ROAD 3rd ROAD, MALAD (WEST)
MUMBAI – 400 064 (INDIA) TEL.+91 22 2881 05 78 FAX.+91 22 2881 18 17

DRN BY	ARV	11/03/09	PROJECTION	MAT'L	QTY
CHK BY	RGK	11/03/09		SPEC.	1
APP BY	DD	11/03/09		FINISH	
DIMN	MM	DO NOT SCALE		JOB No.	

ASSY.No. | PART LIST No.

TITLE
DEMAND-FLOW REGULATOR ASSEMBLY EXPLODED

DRG No. . . . . | REV No. 0

This Drawing / Document(and all copyrights and designing rights)
Therein is the property of Shree Ganesh Industries (SGI) and contains confidential / proprietary
information it is supplied on the basis that is to be treated as confidential
is not to be copied or communicated to any other person and must not be used for tendering
purpose or for manufacturing in each case without the prior written consent of Shree Gsnesh Industries (SGI)